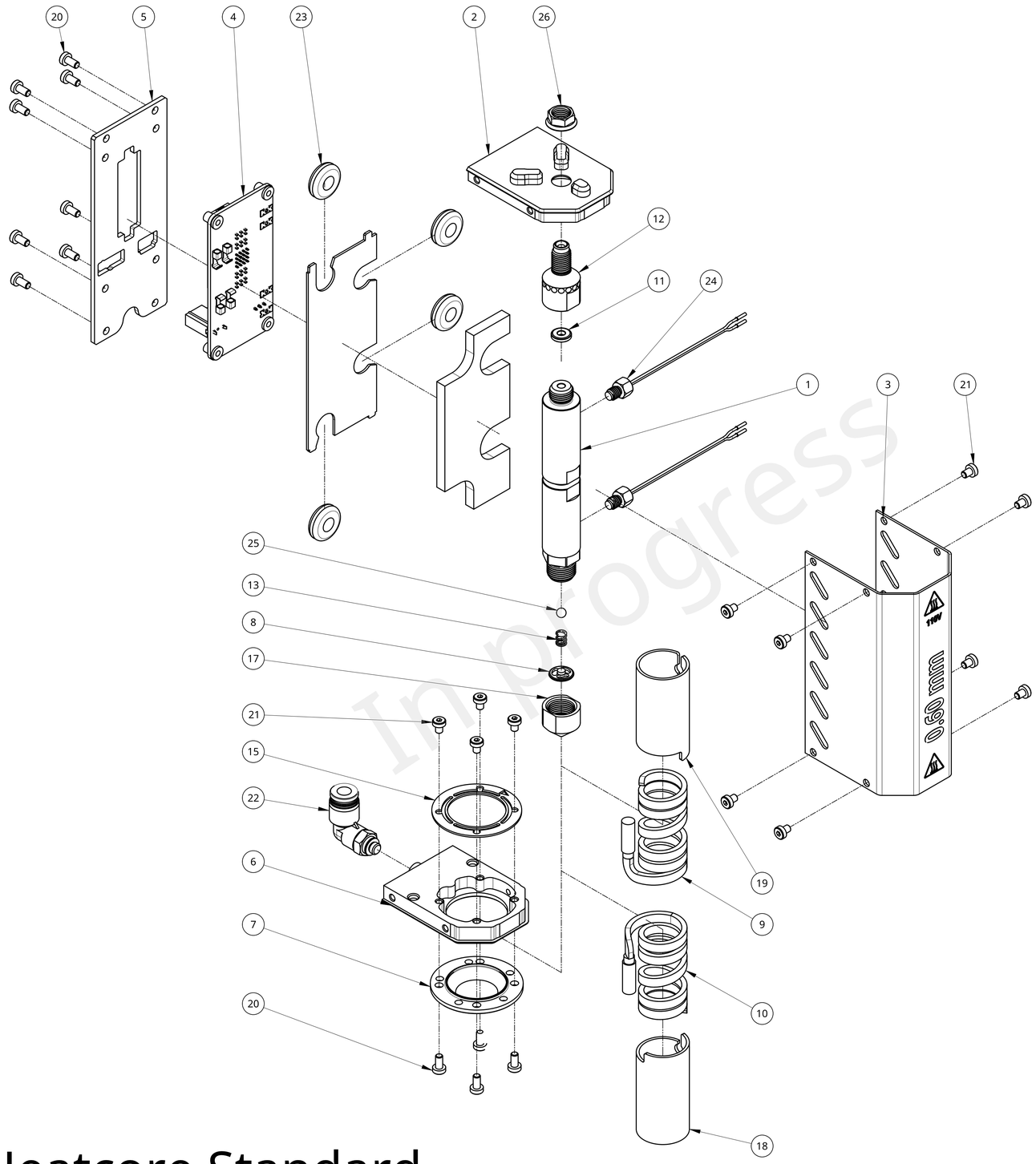

Item	Quantity	Part number	Name
1	1	XXP-02405	Typhoon Heatcore Pro - Heat Cylinder
2	1	XXP-02408	Typhoon Heatcore Pro - Hot Zone Plate
3	1	XXP-02410-LOGO	Typhoon Heatcore Pro - Shield Engraving
4	1	XXP-01451	Typhoon - PCB - Hot Zone
5	1	XXP-02407	Typhoon Heatcore Pro - Hot Zone Back Plate
6	1	XXP-01453	Typhoon - Cooling Shroud - Top
7	1	XXP-01454	Typhoon - Cooling Shroud - Bottom
8	1	XXP-01223	Typhoon - Nozzle - Crush Washer
9	1	XXP-01455	Typhoon - Coil Heater - Top
10	1	XXP-01456	Typhoon - Coil Heater - Bottom
11	1	XXP-02404	Typhoon Heatcore Pro - Heat Break - Crush Washer
12	1	XXP-02403	Typhoon Heatcore Pro - Heatbreak
13	1	XXP-01458	Typhoon - Oozing Plug Spring
14	1	XXP-02409	Typhoon Heatcore Pro - Internal Heat Shield
15	1	XXP-02402	Typhoon Heatcore Pro - Centering Support
16	1	XXP-01773	Typhoon - Internal Shield Insulation
17	1	XXP-02397-060	Typhoon Heatcore Pro - Nozzle 0.60mm
18	1	XXP-02564	Typhoon - Coil Heater Sleeve - Bottom
19	1	XXP-02563	Typhoon - Coil Heater Sleeve - Top
20	12	TPS-00286	Low Profile Socket Head Cap Screw M03 X 0.5 X 06
21	12	XXP-01425	Low Profile Socket Head Cap Screw M03 X 0.5 X 4
22	1	TPS-00242	PL6-M5 Elbow Fitting
23	4	TPS-00244	Silicone Grommet 6.35mm
24	2	XXA-01486	Typhoon PT100
25	1	TPS-00251	4mm Ball
26	1	XXP-02406	Typhoon Heatcore Pro - Heatbreak Nut

In progress

typhon Heatcore Standard

The information contained in this drawing is the sole property of Dyze Design. Any reproduction in part or in whole without the written permission of Dyze Design is prohibited.

DYZE DESIGN

Document Name	SIZE	UNITS	THIRD ANGLE PROJECTION	SCALE	SHEET	DATE
TYPHOON HEATCORE EXPLODED VIEW	D	MM		1:1	1 of 1	2023-08-22

Drawing Number:

CSDT R006